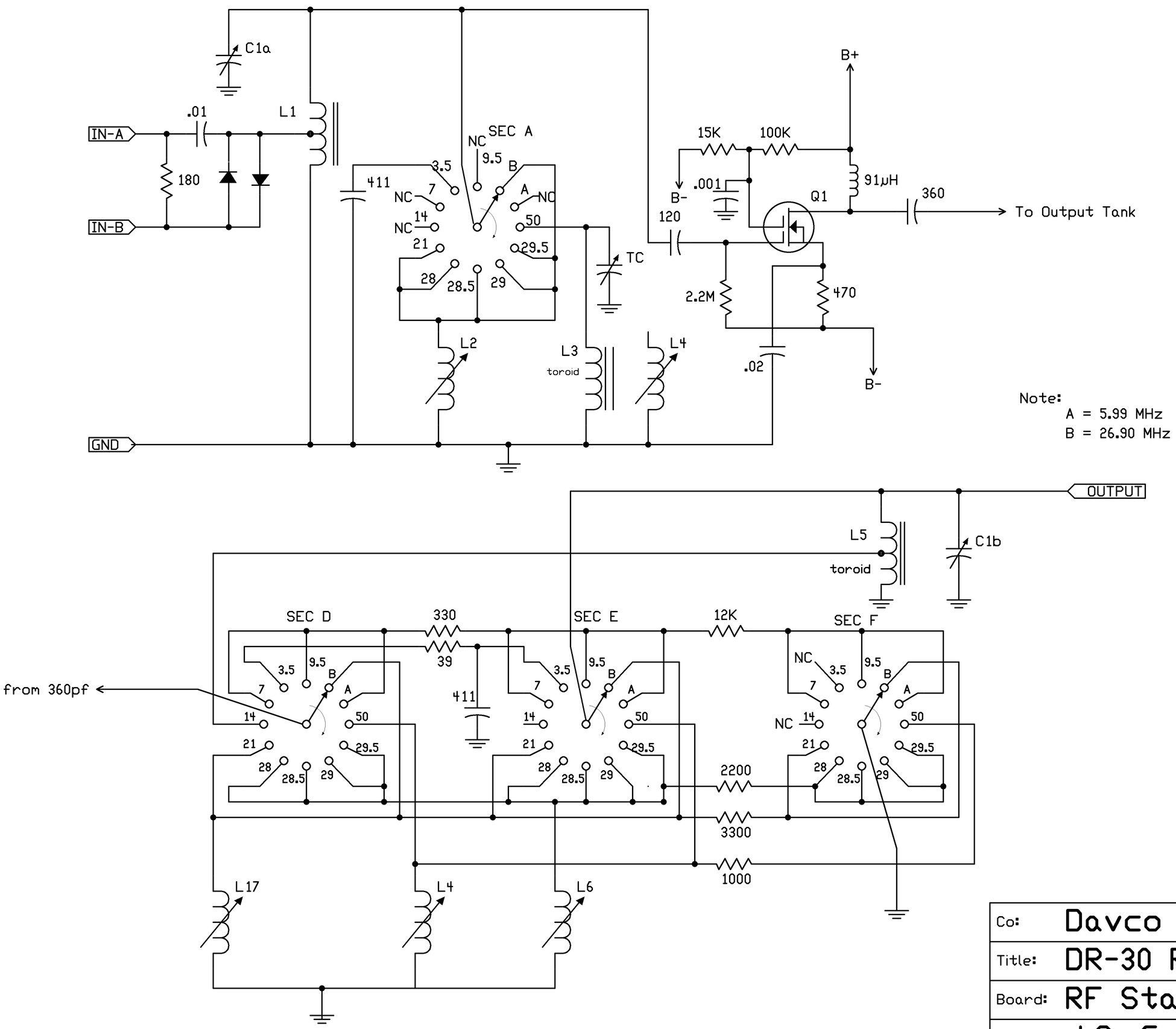

Co:	Davco		
Title:	DR-30 Receiver		
Board:	RF Stage (revised)	Revision:	
Author:	J.C. Garland	Size:	A
Date:	11/12/2000	Sheet	1 of 1